Nevada Department of Education

Nevada Ready!

Nevada School Bus Out-of-Service Criteria

2020-2021 School Year

Nevada State Board of Education Members

2020-2021

Elaine Wynn, President
Mark Newburn, Vice President
Felicia Ortiz
Robert Blakely
Tamara Hudson
Katherine Dockweiler
Kevin Melcher
Dawn Etcheverry Miller
Wayne Workman
Cathy McAdoo
Alex Gallegos, Student Representative

Nevada Department of Education

Jhone M. Ebert
Superintendent of Public Instruction

Jonathon Moore, Ed.D
Deputy Superintendent for Student Achievement

Heidi Haartz
Deputy Superintendent for Business & Support Services

Felicia Gonzales
Deputy Superintendent for Educator Effectiveness and Family Engagement

Christy McGill
Director of the Office of Safe and Respectful Learning Environment

Jennah Fiedler
Program Officer, Pupil Transportation

Mission Statement

To improve student achievement and educator effectiveness by ensuring opportunities, facilitating learning, and promoting excellence.

Vision Statement

All Nevadans ready for success in the 21st Century

Introduction

The purpose of the Nevada School Bus Out of Service Criteria is to identify defects on a school bus that would require the school bus be placed out-of-service.

Nevada Revised Statue 385.075 requires the State Board establish policies to govern the administration of all functions of the State relating to supervision, management and control of public schools not conferred by law on some other agency.

Nevada Revised Statue 386.830 requires that school buses used to transport students must be in good condition and inspected semiannually by the Department of Public Safety (Nevada Highway Patrol, Commercial Enforcement section) to ensure the vehicles are mechanically safe and meet the Nevada School Bus Standards established by the Nevada State Board of Education. The Nevada Highway Patrol will conduct inspections per the Out of Service Criteria, the Federal Code of Regulations, the CVSA out of service criteria, and the NHP School Bus inspection guidance. The Nevada Highway Patrol has the authority to place any bus out-of-service for any violation listed in these criteria.

School buses that have an Out-of-Service condition while transporting students are allowed to return to the safest spot or destination, whichever comes first, as long as the violation is not a serious mechanical failure and does not immediately impact the safe transportation ofthe students.

This document was approved by the Nevada State Board of Education during the October 8, 2020 State Board of Education meeting and is effective as of that date.

TABLE OF CONTENTS

Contents

Driver Out-of-Service Criteria 10
1. Drivers Age 10
2. Commercial Driver's License (CDL) 10
   A. License 10
   B. Commercial Learner's Permit (CLP) 10
   C. Endorsements and Restrictions 10
   D. Classification 11
3. Driver Medical/Physical Requirements 11
   A. Medical Certificate 11
4. Sickness 11
5. Fatigue 11
6. Communication 12
7. Drugs and Other Substances 12
8. Intoxicating Beverages 12
9. Driver's Record of Duty Status 12

Vehicle Out-of-Service Criteria 14
1. Aisles 14
2. Aerosol Cans 14
3. Brake System(s) 14
   A. Defective Brakes 14
4. Brake Adjustment Limit Reference Charts 16
   A. Clamp Type Brake Chamber Data 16
   B. Long Stroke Clamp Type Brake Chamber Data 17
   C. Bolt Type Brake Chamber Data 18
   D. Rotochamber Data 19
   E. DD-3 Brake Chamber Data 19

F. Wedge Brake Data 20
5. Brakes – Other 20
A. Drum (Cam-type and Wedge) Air Brakes 20
B. Defective Lining Conditions 20
C. Air Disc Brakes 21
D. Hydraulic and Electric Brakes 22
E. Front Steering Axle(s) Brakes 23
F. Air Disc Brakes 24
G. Hydraulic Brakes – (Front Steering Brakes) 25
H. Spring Brake Chambers 26
I. Parking Brake 26
J. Brake Smoke/Fire 26
K. Brake Drums or Rotors (Discs) 27
L. Brake Hose/Tubing 27
M. Air Pressure Gauge 28
N. Low Pressure Warning Device 28
O. Air Loss Rate 28
P. Air Reservoir (Tank) 29
Q. Air Compressor 29
R. Hydraulic Brakes 29
S. Vacuum Brakes 30
6. Crossing Control Arm 31
7. Defrosters 31
8. Differential 31
9. Door, Entrance 31
10. Driveline/Driveshaft 31
A. Yoke Ends 31
B. Universal Joint 32
C. Center Bearing (Carrier Bearing) 33
D. Driveshaft Tube 34
11. Electrical Cables and System in Engine Compartment 34

12. Emergency Equipment 35
A. Fire Extinguisher 35
B. First Aid and Body Fluid Kit 35
C. Emergency Warning Devices 36
13. Emergency Exits 36
14. Engine Fire Suppression System 37
15. Exhaust System 38
16. Floors 38
17. Frame and Body 38
A. Frame Members 38
B. Tire and Wheel Clearance 39
C. Roof/Body Structure 39
18. Fuel System 40
A. Liquid Fuels 40
B. Gaseous Fuels 40
19. Handrail 42
20. Horn 42
21. Lighting Devices 42
A. Headlamps 42
B. Tail Lamps 42
C. Stop Lamps 42
D. Turn Signals 43
E. Warning Lights 43
F. Back-up Warning Alarm 43
22. Mirrors 44
23. Restraint Systems 44
A. Driver Restraint System 44
B. Student Restraint Systems 44
24. Steering Mechanism 44
A. Steering Wheel Lash 44
B. Steering Column 45

C. Front Axle Beam and All Steering Components.....46
D. Steering Gear Box 46
E. Pitman Arm 46
F. Power Steering 46
G. Ball and Socket Joints 47
H. Tie Rods and Drag Links 47
I. Nuts 47
J. Steering System 48
25. Seats and Barriers 48
26. Seat-Driver 48
27. Stepwell 49
28. Stop Signal Arm(s).....49
29. Suspension 49
A. Axle Parts/Members.....49
B. Spring Assembly 49
C. Composite Springs.....51
D. Suspension Connecting Rod, Tracking Component Assembly.....52
E. Torque, Radius or Tracking Components 53
30. Tires 53
A. Any Tires on any Front Steering Axle.....53
B. All Tires Other Than Those Found on the Front Steering Axle 55
C. Lodged Items Between Tires of a Dual Tire Set 57
31. Wheelchair-Lift Equipped Buses 57
32. Wheels, Rims and Hubs 58
A. Lock or Side Ring 58
B. Rim Cracks.....58
C. Disc Wheel Cracks 58
D. Bolt/Stud Holes (Disc Wheels).....58
E. Spoke Wheel Cracks 58
F. Tubeless Demountable Adapter Cracks 58
G. Wheel Fasteners.....58

H. Welds 59
I. Hubs 59
33. Windows.....61
34. Windshield Wipers.....61

Driver Out-of-Service Criteria

1. Drivers Age

Driver is not at least 21 years of age. Federal Motor Carrier Safety Regulation 391.11, General Qualifications for Drivers

2. Commercial Driver's License (CDL)

A. License

1) Does not possess a valid CDL with required endorsements, issued by his/her state or jurisdiction of domicile. Federal Motor Carrier Safety Regulation 383.23, Commercial Driver's License

2) Operating a CDL required commercial motor vehicle with driving privileges revoked, suspended, cancelled, or otherwise disqualified. Federal Motor Carrier Safety Regulation 383.51, Disqualification of Drivers

B. Commercial Learner's Permit (CLP)

1) Is not accompanied by the holder of a valid CDL.

2) Does not hold a valid automobile driver's license or have a valid operator's status allowed by licensing jurisdiction.

3) Operating a commercial motor vehicle transporting passengers requiring the passenger (P) or school bus (S) endorsement(s).
   Federal Motor Carrier Safety Regulation 383.25, Commercial Drivers Learner's Permit (CDLP)

C. Endorsements and Restrictions

Operating a commercial motor vehicle without the proper endorsements, or in violation of restrictions. Federal Motor Carrier Safety Regulation 383.23, Commercial Driver's License

D. Classification

Driver does not possess the proper class of license for the vehicle being operated. Federal Motor Carrier Safety Regulation 383.91, Commercial Motor Vehicle Groups

3. Driver Medical/Physical Requirements

A. **Medical Certificate**

A. Operating a CMV without corrective lenses or hearing aid as indicated on the driver's medical certificate. Federal Motor Carrier Safety Regulation, 391.11 General Disqualification of Drivers

B. Operating a CMV without a valid medical certificate in possession. If driver fails to produce a medical certificate or has an expired medical certificate. Federal Motor Carrier Safety Regulation 391.41, Physical Disqualifications for Drivers

C. A CDL driver whose CDLIS query indicates no medical certification has been filed and who presents a valid medical certificate during inspection shall not be placed out-of-service during the transition period.

D. Operating a CMV with a fraudulent medical certificate. Federal Motor Carrier Safety Regulation 390.35, Certificates, Reports, and Records: Falsification, Reproduction or Alteration

4. Sickness

When so impaired by sickness that the driver should not continue the trip. Federal Motor Carrier Safety Regulation 392.3, Ill or Fatigued Operator

5. Fatigue

When a driver operates a commercial motor vehicle while his/her ability or alertness is so impaired, or so likely to become impaired, through fatigue as to make it unsafe for him/her to begin or

continue to operate the CMV. Federal Motor Carrier Safety Regulation 392.3, Ill or Fatigued Operator

6. Communication

Driver is unable to communicate sufficiently to understand and respond to official inquiries and directions. Federal Motor Carrier Safety Regulation 391.11, General Qualifications for Drivers

7. Drugs and Other Substances

A. Driver shall not be in possession as identified in FMCSR 392.4.

B. Driver shall not be under the influence, with probable cause as identified under section.
Federal Motor Carrier Safety Regulation 392.4, Drugs and Other Substances

8. Intoxicating Beverages

A. Any driver who is under the influence of intoxicating beverage, consumes an intoxicating beverage regardless of its alcohol content, or have any measured alcohol concentration or any detected presence of alcohol while on duty, or operating or in physical control of a motor vehicle.

B. Be on duty or operating a motor vehicle while the driver possesses an intoxicating beverage, regardless of its alcohol content.

C. Driver violating any roadside out-of-service order regarding intoxicating beverages.
Federal Motor Carrier Safety Regulation 392.5, Alcohol Prohibitions

9. Driver's Record of Duty Status

D. **10 Hour Rule -** Driving more than ten (10) hours following ten (10) consecutive hours off duty. Federal Motor Carrier Safety Regulation 395.5, Maximum Driving Time for Passenger Carrying Vehicles

E. **15 Hour Rule -** Driving for any period after having been on duty

fifteen (15) hours. Federal Motor Carrier Safety Regulation 395.5, Maximum Driving Time for Passenger Carrying Vehicles, and Nevada Revised Statue 386.815

F. **70 Hour Rule -** Been on duty 70 hours in 8 consecutive days. Federal Motor Carrier Safety Regulation 395.5, Maximum Driving Time for Passenger Carrying Vehicles

G. **No Record of Duty Status (Logbook)** - No record of duty status in possession when one is required. A record of duty status (logbook) is not required for school bus operations, defined as transportation provided to school children from home to school and from school to home. If the driver performs non-school bus operations in interstate commerce, then a record of duty status is required.

H. **No Previous 7 Days** - Failing to have in possession a record of duty status for the previous (7) consecutive days.

I. **False Record of Duty Status** (log Book) - A required record of duty status that does not accurately reflect the driver's actual activities and duty status (including time and location of each duty status change and the time spent in each duty status) in an apparent attempt to conceal a violation of an hours of service limitation.
Federal Motor Carrier Safety Regulation 395.8, Driver's Record of Duty Status

Vehicle Out-of-Service Criteria

1. Aisles

Any aisle that is obstructed or has objects blocking the exits. FMCSR 393.91, Buses, Aisle Seats Prohibited

2. Aerosol Cans

Any aerosol cans that are stored in the passenger compartment.

3. Violation SBR.AC Not OOS Brake System(s)

A. **Defective Brakes**

The number of defective brakes is equal to or greater than 20 percent of the service brakes on the vehicle. A defective brake includes any brake that meets one of the following criteria. Federal Motor Vehicle Safety Standards 396.3, Inspection, Repair, and Maintenance

Note: Steering axle brakes under "Front Steering Axle(s) Brakes," are to be included in the 20 percent criterion.

1) **Absence of effective braking action** upon application of the service brakes such as brake lining/pad failing to move or contact braking surface upon application. Federal Motor Vehicle Safety Standards 393.48, Brakes to be Operative

2) **Audible Air Leak** at air chamber. (Example: ruptured diaphragm, loose chamber clamp, etc. Federal Motor Carrier Vehicle Standards 396.3, Inspection, Repair, and Maintenance

   Note: Refer to "Air Loss Rate".

3) **Missing brake on any axle** required to have brakes.

Federal Motor Vehicle Safety Standards 393.42,Brakes Required on all Wheels

4) **Brake Adjustment Limits.** Bring reservoir pressure between 90 – 100 psi (620 – 690 kPA), turn engine off and then fully apply the brakes. All brake measurement shall be made in 1/8-inch (3.2 mm) increments.

   a) One brake at 1/4 inch (6.4 mm) or more beyond the adjustment limit.

      Example: Type 30 clamp type air chamber pushrod measured at 2 1/4 inches (57.2 mm) would be one defective brake.)

   b) A brake found at 1/8 inch (3.2 mm) beyond the brake adjustment limit shall be considered 0.5 (1/2) a defective brake for determining the number of defective brakes per the 20 percent defective brake criterion.

      Example: Type 30 clamp type brake chamber pushrods measure – Two (2) at 2 1/8 inches (54.0 mm) equal to 1 defective brake.)

      Note: When the vehicle is declared out-of-service for 20 percent brake violations, all brakes found beyond the brake adjustment limit must be repaired.

      Note: When calculating/determining the number of defective brakes, round all fractions down to the next whole number (e.g. 4.5 brake violations = 4 defective brakes).

   c) **Any wedge brake** where the combination brake lining movement of both top and bottom shoes exceeds 1/8 inch (3.2 mm).

      FMCSR 393.47, Brake Actuators, Slack Adjusters, Linings/Pads and Drums/Rotors

4. Brake Adjustment Limit Reference Charts

1) Clamp Type Brake Chamber Data

Type	Outside Diameter	Brake Adjustment Limit	Half Defect Limit	Full Defect Limit
6	4 ½ (114 mm)	1 ¼ (31.8 mm)	1 3/8 (34.9 mm)	1 ½ (38.1 mm)
9	4 ½ (114 mm)	1 3/8 (34.9 mm)	1 ½ (38.1 mm)	1 5/8 (41.3 mm)
12	5 11/16 (145	1 3/8 (34.9 mm)	1 ½ (38.1 mm)	1 5/8 (41.3 mm)
16	6 3/8 (162 mm)	1 ¾ (44.5 mm)	1 7/8 (47.6 mm)	2 (50.8 mm)
20	6 25/32 (172 mm)	1 ¾ (44.5 mm)	1 7/8 (47.6 mm)	2 (50.8 mm)
24	7 7/32 (184 mm)	1 ¾ (44.5 mm)	1 7/8 (47.6 mm)	2 (50.8 mm)
30	8 3/32 (206 mm	2 (50.8 mm)	2 1/8 (54.0 mm)	2 1/4 (57.2 mm)
36	9 (229 mm)	2 1/4 (57.2 mm)	1 3/8 (60.3 mm)	2 1/2 (63.5 mm)

Note: Service chambers with housings that are permanently crimped and sealed together are considered clamp type chambers even though they do not have a separate clamp band.

Note: A brake found at the adjustment limit is not a defect for the purposes of the 20% rule.

2) Long Stroke Clamp Type Brake Chamber Data

Type	Outside Diameter	Brake Adjustment Limit	Half Defect Limit	Full Defect Limit
12	5 11/16 (145 mm)	1 ¾ (44.45mm)	1 7/8 (47.6 mm)	2 (50.8 mm)
16	6 3/8 (162 mm)	2 (50.8 mm)	2 1/8 (54.0mm)	2 ¼ (57.2mm)
20 (3” rated stroke)	6 25/32 (172 mm)	2 ½ (63.5 mm)	2 5/8 (66.7 mm)	2 ¾ (69.9 mm)
24 (2.5” rate stroke)	7 7/32 (184 mm)	2 (50.8 mm)	2 1/8 (54.0 mm)	2 ¼ (57.2 mm)

24 (3” rated stroke)	7 7/32 (184 mm)	2 ½ (63.5 mm)	2 5/8 (66.7 mm)	2 ¾ (69.9 mm)
30	8 3/32 (206 mm)	2 ½ (63.5 mm)	2 5/8 (66.7mm)	2 ¾ (69.9 mm)

Note: Rated stroke is indicated on a tag and is only used to identify chamber size.

Note: Service chambers with housings that are permanently crimped and sealed together are considered clamp type chambers even though they do not have a separate clamp band.

Note: A brake found at the adjustment limit is not a defect for the purposes of the 20% rule.

3) Bolt Type Brake Chamber Data

Type	Outside Diameter	Brake Adjustment Limit	Half Defect Limit	Full Defect Limit
A	6 15/16 (176 mm)	1 3/8 (34.9 mm)	1 ½ (38.1 mm)	1 5/8 41.3 mm)
B	9 3/16 (234 mm)	1 ¾ (44.5mm)	1 7/8 (47.6 mm)	2 (50.8 mm)
C	8 1/16 (205 mm)	1 ¾ (44.5mm)	1 7/8 (47.6 mm)	2 (50.8 mm)
D	5 ¼ (133 mm)	1 ¼ (31.8 mm)	1 3/8 (34.9 mm)	1 ½ (38.1 mm)
E	6 3/16 (157 mm)	1 3/8 (34.9 mm)	1 ½ (38.1 mm)	1 5/8 (41.3 mm)
F	11 (279 mm)	2 ¼ (57.2 mm)	2 3/8 (60.3 mm)	2 ½ (63.5 mm)
G	9 7/8 (251 mm)	2 (50.8 mm)	2 1/8 (54.0 mm)	2 ¼ (57.2 mm)

Note: A brake found at the adjustment limit is not a defect for the purposes of the 20% rule.

4) Rotochamber Data

Type	Outside Diameter	Brake Adjustment Limit	Half Defect Limit	Full Defect Limit
9	4 9/32 (109 mm)	1 ½ (38.1 mm)	1 5/8 (41.3 mm)	1 ¾ (44.5 mm)
12	4 13/16 (122 mm)	1 ½ (38.1 mm)	1 5/8 (41.3 mm)	1 ¾ (44.5 mm)
16	5 13/32 (138 mm)	2 (50.8 mm)	2 1/8 (54.0 mm)	2 ¼ (57.2 mm)
20	5 15/16 (151 mm)	2 (50.8 mm)	2 1/8 (54.0 mm)	2 ¼ (57.2 mm)
24	6 13/32 (163 mm)	2 (50.8 mm)	2 1/8 (54.0 mm)	2 ¼ (57.2 mm)
30	7 1/16 (180 mm)	2 ¼ (57.2 mm)	2 3/8 (60.3 mm)	2 ½ (63.5 mm)
36	7 5/8 (194 mm)	2 ¾ (69.9 mm)	2 7/8 (73.0 mm)	3 (76.2 mm)
50	8 7/8 (226 mm)	3 (76.2 mm)	3 2/8 (79.4 mm)	3 ¼ (82.6 mm)

Note: A brake found at the adjustment limit is not a defect for the purposes of the 20% rule.

5) DD-3 Brake Chamber Data

Type	Outside Diameter	Brake Adjustment Limit	Half Defect Limit	Full Defect Limit
30	8 1/8 (206 mm)	2 ¼ (57.2 mm)	2 3/8 (60.3 mm)	2 ½ (63.5 mm)

NOTE: This chamber has three air lines and is found on motor coaches.

6) Wedge Brake Data

The combined movement of both brake shoe lining scribe marks shall not exceed 1/8 inch (3.2 mm).

5. Brakes – Other

1) Drum (Cam-type and Wedge) Air Brakes

a) Missing or broken brake shoe, lining, return spring (shoe or chamber), anchor pin, spider, cam roller, camshaft, pushrod, yoke, clevis pin, clevis pin retainer (e.g., cotter pin), brake adjuster, parking brake power spring, or air chamber mounting bolt.

b) Loose air chamber, spider, or camshaft support bracket.
FMCSR 393.48, Brakes to be Operative

2) Defective Lining Conditions

a) Lining cracks or voids exceed 1/16 inch (1.6 mm) in width observable on the edge of the lining.

b) Portion of a lining segment missing such that a fastening device (rivet or bolt) is exposed when viewing the lining from the edge.

c) Crack that exceeds 1 1/2 inch (38.1 mm) in length.

d) Loose lining segment. (Approximately 1/16 inch (1.6 mm) or more movement)

e) Complete lining segment missing.

f) The friction surface of the brake drum and the brake friction material are contaminated by oil or grease.

Note: Also refer to "Wheels, Rims and Hubs" if wheel is actively leaking.

g) Lining thickness less than 1/4 inch (6.4 mm) or worn into the wear indicator if lining is so marked, measured at the shoe center.
FMCSR 393.47, Brake Actuators, Slack Adjusters, Linings/Pads and Drums/Rotors

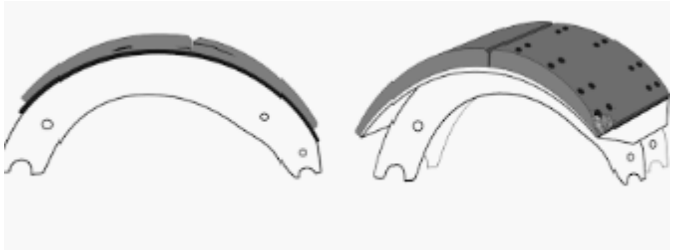

3) Air Disc Brakes

(Exposed Pushrods and Direct Coupled – Air Chamber to Caliper)

a) Missing or broken caliper, brake pad, pad retaining component, pushrod, yoke, clevis pin retainer (e.g., cotter pin), brake adjuster, parking brake power spring, chamber return spring, or air chamber mounting bolt.

b) Loose or missing brake chamber or caliper mounting bolt.
FMCSR393.48, Brakes to be Operative

Rotor has evidence of metal to metal contact on the friction surface. FMCSR 393.47, Brake Actuators, Slack Adjusters, Linings/Pads and Drums/Rotors.

c) Rotor has severe rusting on the rotor friction surface on either side (light rusting on the friction surface is normal).
FMCSR 393.48, Brakes to be Operative

d) The friction surface of the brake rotor and the brake friction material are contaminated by oil or grease.

Note: Also refer to "Wheels, Rims and Hubs" if wheel seal is actively leaking.

e) Brake pad thickness less than 1/16 inch (1.6 mm) or to wear indicator if lining is so marked.
FMCSR 393.47, Brake Actuators, Slack Adjusters, Linings/Pads and Drums/Rotors

4) Hydraulic and Electric Brakes

a) Missing or broken caliper, pad retaining component, brake pad, shoe, or lining.

b) Loose or missing brake caliper mounting bolt.

c) Movement of the caliper within the anchor plate, in the direction of wheel rotation, exceeds 1/8 inches. FMCSR 393.48, Brakes to be Operative

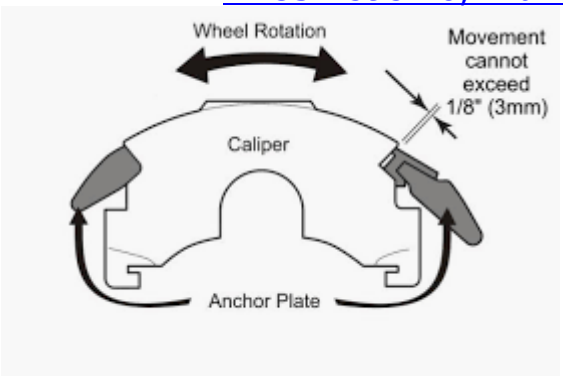

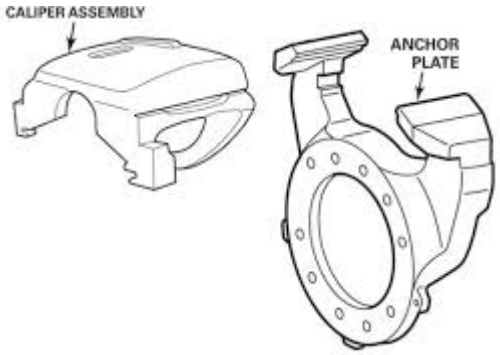

d) Rotor or drum has evidence of metal to metal contact on the friction surface. FMCSR393.47, Brake Actuators, Slack Adjusters, Linings/Pads and Drums/Rotors

e) Rotor has severe rusting on the rotor friction surface on either side (light rusting on the friction surface is normal. FMCSR393.48, Brakes to be Operative

f) Friction surface of the brake rotor and the brake friction material are contaminated by oil, grease, or brake fluid. FMCSR 393.47, Brake Actuators, Slack Adjusters, Linings/Pads and Drums/Rotors.

Note: Also refer to *Wheels*, *Rims and Hubs* if wheel seal is actively leaking.

g) Lining or pad with a thickness of 1/16 inch (1.6 mm) or less for disc or drum brakes. FMCSR 393.47, Brake Actuators, Slack Adjusters, Linings/Pads and Drums/Rotors

5) Front Steering Axle(s) Brakes

In addition to being included in the 20 percent criterion, the following place a vehicle out-of-serve condition:

a) Any inoperable brake (such as any brake lining/pad failing to move or contact braking surface upon application) or

missing brake on either wheel of any steering axle or any vehicle equipped or required to be equipped with steering axle brakes. FMCSR 393.42, Brakes Required on all Wheels

b) Drum (Cam-Type and Wedge) Air Brakes – (Front Steering Brakes)

a) Mismatched air chamber sizes.

Note: Mismatched air chamber versus regular stroke air chamber and excludes differences in design type such as a type 20 clamp versus type 20 rotochamber. A bolt chamber with any chamber type is a mismatch.

b) Mismatched brake adjuster length.

c) Defective Lining Conditions.

i. Lining cracks or voids that exceed 1/16 inch (1.6 mm) in width observable on the edge of the lining.

ii. Portion of a lining segment missing such that a fastening device (rivet or bolt) is exposed when viewing the lining from the edge.

iii. Crack exceeds 1 1/2 inch (38.1 mm) in length.

iv. Loose lining segment. (Approximately 1/16 inch (1.6 mm) or more movement).

v. Complete lining segment missing.

vi. The friction surface of the brake drum and the brake friction material are contaminated by oil or grease.

Note: Refer to *Wheels, Rims and Hubs* if wheel seal is actively leaking.

vii. Lining with thickness less than 3/16 inch (4.8 mm) for a shoe with a continuous strip of lining or ¼ inch (6.4mm) for a shoe with two lining blocks for drum brakes or worn into the wear indicator if lining is so marked. Federal Motor Vehicle Safety Standards 393.47,Brake Actuators, Slack Adjusters, Linings/Pads and Drums/Rotors

6) Air Disc Brakes

(Exposed Pushrods and Direct Coupled -Air Chamber to Caliper) – Front Steering Axle)

a) Mismatched air chamber sizes.

Note: Mismatched air size excludes long stroke air chamber versus regular stroke air chamber. A mismatch on an air disc brake exists only when there is measurable difference in air chamber clamp sizes.

b) Mismatched brake adjuster length.

c) Missing brake pad FMCSR 393.47, Brake Actuators, Slack Adjusters, Linings/Pads and Drums/Rotors

d) Rotor has evidence of metal to metal contact on the rotor friction surface.

e) Rotor has severe rusting on the rotor friction surface on either side (light rusting on the friction surface is normal). FMCSR393.48, Brakes to be Operative

f) The friction surface of the brake rotor and the brake friction material are contaminated by oil or grease.

Note: Refer to "Wheels, Rims and Hubs" if wheel seal is actively leaking.

g) Brake pad thickness less than 1/16 inch (1.6 mm) or to wear indicator if lining is so marked. FMCSR 393.47,

Brake Actuators, Slack Adjusters, Linings/Pads and Drums/Rotors

7) Hydraulic Brakes – (Front Steering Brakes)

a) Missing lining or pad. FMCSR393.47, Brake Actuators, Slack Adjusters, Linings/Pads and Drums/Rotors

b) Movement of the caliper within the anchor plate, in the direction of wheel rotation, exceeds 1/8 inches (3.2 mm).

c) Rotor has evidence of metal to metal contact on the rotor friction surface.

d) Rotor has severe rusting on the rotor friction surface on either side (light rusting on the friction surface is normal).

e) The friction surface of the brake drum or rotor and the brake friction material are contaminated by oil, grease, or brake fluid.

Note: Refer to "Wheels, Rims and Hubs" if wheel seal is actively leaking.

f) Pad with a thickness 1/16 inch (1.6 mm) or less for disc brakes.
FMCSR 393.47, Brake Actuators, Slack Adjusters, Linings/Pads and Drums/Rotors

8) Spring Brake Chambers

Any non-manufactured holes or cracks in the spring brake housing section of a parking brake. FMCSR 396.3, Inspection, Repair, and Maintenance

9) Parking Brake

No brakes on the vehicle are applied upon actuation of the parking brake control, including driveline hand-controlled parking brakes. FMCSR 393.41, Parking Brake System

10) Brake Smoke/Fire

Brake malfunction causing smoke or fire to emit from the wheel end. FMCSR 393.48, Brakes to be Operative

Example: Brake lining continuously in contact with brake drum or rotor.

Note: This does not include overheating due to severe brake use.

Note: Refer to "Wheels, Rims and Hubs;" as the cause may either be the brakes or a problem in the hub and bearing area.

11) Brake Drums or Rotors (Discs)

a) **Any portion of the drum has any external crack, or has any crack that opens upon brake application.

b) **Any rotor (disc) with a crack in length of more than 75 percent of the friction surface and passes completely through the rotor to the center vent from either side or completely through a solid rotor.

c) A rotor surface is worn to or through center vents.

d) Any portion of the drum or rotor (discs) missing or in danger of falling away.

****Note:** Do not confuse short hairline heat check cracks with flexural cracks.
FMCSR 393.47, Brake Actuators, Slack Adjusters, Linings/Pads and Drums/Rotors

12) Brake Hose/Tubing

a) Any damage extending through the outer reinforcement ply.

Note: Rubber impregnated fabric cover **is not** a reinforcement ply.

Note: Thermoplastic nylon tube may have braid reinforcement or color difference between cover and

inner tube. Exposure of second color is out-of-service condition.

b) Bulge/swelling when air pressure is applied.

c) Audible leak at other than a proper connection.

d) Improperly joined such as a splice made by sliding the hose ends over a piece of tubing and clamping the hose to the tube.

e) Damaged by heat, broken, or crimped in such a manner as to restrict air flow.
FMCSR 393.45, Brake Tubing and Hoses: Hose Assemblies and End Fitting

13) Air Pressure Gauge

Inoperative or defective primary or secondary air pressure gauge. FMCSR 393.51, Warning Signals, Air Pressure and Vacuum Gauges

14) Low Pressure Warning Device

Low air pressure warning device missing, inoperative, or does not operate continuously if either the primary or secondary reservoir is at 55 psi (379 kPa) and below, or 1/2 of the governor cut-out pressure, whichever is less. FMCSR 393.51, Warning Signals, Air Pressure and Vacuum Gauges

Note: If either an audible or visual warning device is working as required, vehicle should not be placed out-of-service.

15) Air Loss Rate

If an air leak is discovered and either the primary or secondary reservoir pressure is not maintained when:

a) Governor is cut-in;

b) Reservoir pressure is between 90-100 psi (551-620 kPa);

c) Engine is at idle; and

d) Service brakes are either fully applied or released.

16) Air Reservoir (Tank)

An air reservoir (tank) separated at either end from its original attachment point(s) allowing movement of more than 1 inch (25.4 mm) in any direction. FMCSR 396.3, Inspection, Repair, and Maintenance

17) Air Compressor
(Normally to be inspected when readily visible or when conditions indicate compressor problems)

a) Loose compressor mounting bolts.

b) Cracked, broken, or loose pulley.

c) Cracked or broken mounting brackets, braces, or adapters.
FMCSR 396.3(a)(1), Inspection, Repair, and Maintenance

18) Hydraulic Brakes

a) The fluid level in any master cylinder reservoir is less than 1/4 full or below minimum marking.
FMCSR 396.3, Inspection, Repair, and Maintenance

Note: Normally to be inspected when readily visible or problems are apparent.

b) Hydraulic or vacuum lines, hoses, or connections are restricted, crimped, broken, or damaged through the outer reinforcement ply.

Note: Rubber impregnated fabric cover is not a reinforcement ply.

c) Any observable seepage, bulge, or swelling on a brake hose under application pressure.

d) Improperly joined, such as a splice made by sliding a

hose/tube end over the brake line and clamping the hose to the brake line.

e) Any observable leaking hydraulic fluid in the brake system upon full application.
FMCSR 393.45, Brake Tubing and Hoses: Hose Assemblies and End Fittings

f) No pedal reserve with engine running upon full brake application. FMCSR 393.40, Required Brake Systems

g) Brake power assist unit is inoperative.

h) Hydraulic power brake (HPB) unit is inoperative.
FMCSR 396.3, Inspection, Repair, and Maintenance

i) Brake failure warning system is missing, inoperative, disconnected, defective, or activated while the engine is running with or without brake application. FMCSR 393.51, Warning Signals, Air Pressure and Vacuum Gauges

j) The hydraulic brake backup system is inoperative.
FMCSR 396.3 Inspection, Repair, and Maintenance

19) Vacuum Brakes

a) Insufficient vacuum reserve to permit one full brake application after engine is shut off. FMCSR 393.50, Reservoirs Required

b) Vacuum hose(s) or line(s) restricted, abraded (chafed) through outer cover-to-cord ply, crimped, cracked, broken, or has collapse of vacuum hose(s) when vacuum is applied. FMCSR 393.45, Brake Tubing and Hoses: Hose Assemblies and End Fittings

6. Crossing Control Arm

1) Any school bus not equipped with a crossing control arm, or any school bus whose crossing control arm is non-operational when required. Violation code 392.2SBR.CCA

2) The installation of such a mechanical device is not required for a school bus which is used solely to transport pupils with special needs who are individually loaded and unloaded in a manner which does not require them to walk in front of the bus. Nevada Revised Statue 386.840

7. Defrosters

Any vehicle whose defrosters are not operational. FMCSR 393.79, Windshield Defrosting and Defogging Systems and National School Transportation Specifications and Procedures, 2015,(pg. 94)

8. Differential

Cracked or leaking housing. FMCSR 393.207, Suspension Systems

9. Door, Entrance

Door does not properly open and close without any obstruction or movement and maintain an open or closed position. FMCSR 393.203(a)

10. Driveline/Driveshaft

1) Yoke Ends

(Including slip yoke, yoke shaft, tube yoke and end fitting yoke)

a) Any visible crack in a yoke end.

b) Any yoke mounting hardware loose (with hand pressure only), broken or missing.

c) Any horizontal or vertical movement of slip joint yoke shaft or greater than ½ inch (12.8 mm), with hand pressure only.

d) Any loose, broken, or missing end fitting fastener. Federal Motor Vehicle Safety Standards 396.3, Inspection, Repair, and Maintenance

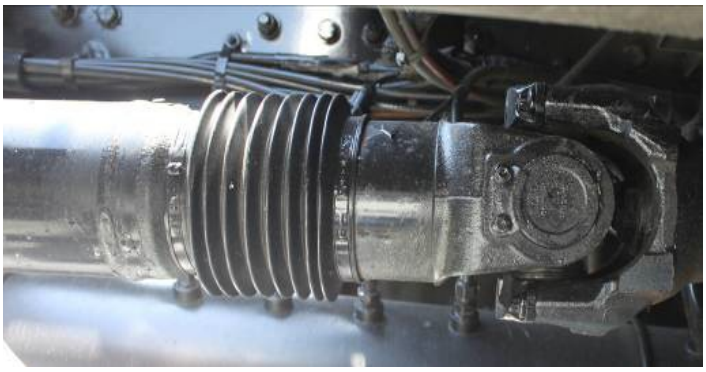

2) Universal Joint

a) Any independent vertical movement between opposing yoke ends greater than 1/8 inch (3/2 mm), with hand pressure only.

b) Any missing universal joint bearing cap.

c) Any missing, broken, or loose (with hand pressure only) universal joint bearing cap bolt.

d) Any bearing cap retainer clip is missing. Federal Motor Vehicle Safety Standards 396.3, Inspection, Repair, and Maintenance

3) Center Bearing (Carrier Bearing)

a) Any broken or loose center bearing bracket, bracket bolts or mounting hardware.

b) Any center bearing bracket crack equaling 50 percent or more of the original bracket width.

c) More than ½ inch (12.8 mm) vertical movement (with hand pressure only) of the shaft in the center bearing carrier.
FMCSR 396.3, Inspection, Repair, and Maintenance

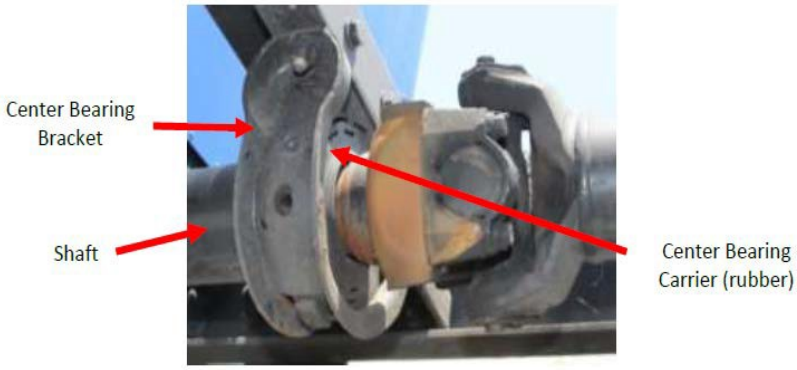

4) Driveshaft Tube

a) Any original metal crack in the shaft tube greater than ¼ inch (6.4 mm) in length.

b) Obvious cracked weld at shaft tube end.

c) Any shaft tube with obvious twist.
Federal Motor Vehicle Safety Standards 396.3, Inspection, Repair, and Maintenance

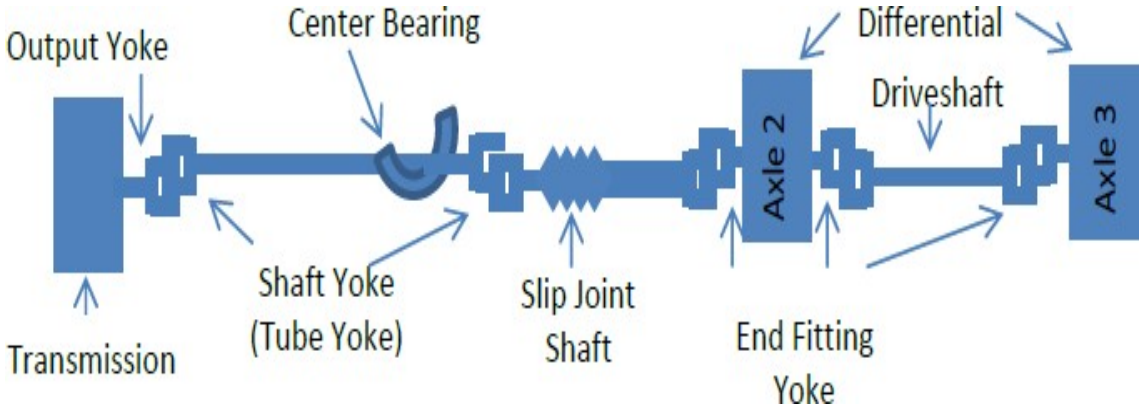

11. Electrical Cables and System in Engine Compartment

1) Electrical cable insulation chafed, frayed, damaged or burnt, causing bare cable to be exposed.

2) Missing or damaged protective grommets insulating electrical cables through metal compartments panels.
FMCSR 393.28, Wiring Systems

3) Broken or unsecured mounting of electrical components.
FMCSR 396.3, Inspection, Repair, and Maintenance

4) Electrical cables unsupported, hanging or missing clamps that may cause chafing or a frayed condition. FMCSR 393.28, Wiring Systems

Note: A cable is the power-conveying part of a high wattage/voltage electrical system. It usually has no circuit

overload protection included in the system (i.e. battery to electrical starter or alternator to battery).

12. Emergency Equipment

1) Fire Extinguisher

a) Any school bus that is not equipped with at least one 5 pound 5 B:C or greater dry chemical fire extinguisher.

b) Any fire extinguisher that:

a) Is not full and fully charged;

b) Has an out-of-date/expired certification tag;

c) Has no pressure gauge;

d) Is not securely mounted, or

e) Is not readily accessible to the driver. FMCSR 393.95(a), Fire Extinguishers

2) First Aid and Body Fluid Kit

a) Any school bus that does not have a first aid kit and body fluid kit.

b) Any first aid kit and body fluid kit that is not easily accessible.

c) Any first aid kit or body fluid kit that is not clearly labeled, easily accessible or blocked in the overhead compartment.

d) Any first aid kit or body fluid kit that is not clearly labeled, easily accessible or securely mounted in the driver's compartment. Violation 392.2SBR.FAK or 392.2SBR.BFK

3) Emergency Warning Devices

a) Any school bus not equipped with at least three

reflectorized triangle road warning devices.

b) Any emergency warning devices that is not easily accessible.

c) Any emergency warning devices that are not clearly labeled, easily accessible or blocked in the overhead compartment.

d) Any emergency warning devices that is not clearly labeled, easily accessible and securely mounted in the driver's compartment.

e) Any emergency warning devices that are not clearly labeled, easily accessible and securely mounted in an outside compartment of the school bus. FMCSR 393.95(f), Emergency Warning Devices.

13. Emergency Exits

1) Any required emergency exit that is missing, inoperable, does not open, close, is not secured as designed or is obstructed. FMCSR 393.62, Emergency Exits for Buses
2) Any emergency door, window or roof hatch that fails to open freely or completely as defined in Federal Motor Vehicle Safety Standards 571.217, Bus Emergency Exits and Window Retention and Release
3) Door prop-rod device is missing or inoperative.
4) An emergency exit equipped with a padlock or similar locking device (excludes interlock systems).
5) Any bus that lacks the required number of emergency exits required in Nevada School Bus Standards at the time the bus was manufactured.
6) Any emergency exits not properly labeled and marked both inside and outside the vehiclein accordance with Nevada Minimum School Bus Standards and Specifications.
7) Emergency exit warning device/buzzer is not audible in the

driver seating position or in the vicinity of the emergency door or window when raised to an open position.

8) Any emergency exit door that is not accessible by a 12 inch minimum aisle or obstructed by a barrier, seat, wheelchair or tie down unless a flip seat is installed and occupied. A flip seat in the unoccupied (up) position shall not obstruct the 12 inch minimum aisle to any side emergency door and must be fully operational and flip up with slight hand pressure.

9) Any emergency exit equipped with a starter interlock that is non-operational.
FMCSR 393.62, Emergency Exits for Buses

14. Engine Fire Suppression System

Any engine fire suppression System that is not properly connected, securely mounted, fully charged or lamp/buzzer is non-operational. Violation Code 392.2SBR.EFSS

15. Exhaust System

1) Any exhaust system is leaking or discharging directly below or at a point forward of the driver or passenger compartment.

   Note: Engine must be running to verify exhaust leaks.

   Note: Does not apply to proper venting for emission systems as designed by the manufacturer.

2) No part of the exhaust system shall be located where it is likely to result in burning, charring, or damaging the electrical wiring, the fuel supply, or any combustible part of the motor vehicle.
FMCSR 393.83, Exhaust Systems

16. Floors

Any floor not maintained to prevent slipping or tripping. FMCSR 393.84, Floors.

17. Frame and Body

1) Frame Members

a) Any cracked, loose, sagging, or broken frame side rail permitting shifting of the body onto moving parts or other conditions indicating an imminent collapse of the frame.

b) Any cracked, loose, or broken frame member adversely affecting support of functional components such as steering gear, engine, transmission, body parts and suspension.

c) One and one-half inches (38 mm) or longer crack in frame side rail web which is directed toward bottom flange.

d) Any crack extending from the frame side rail web around the radius and into the bottom flange.

e) One inch (25 mm) or longer crack in side rail bottom flange.

Note: Items (1) and (2) above apply to all buses, including those having unitized (monocoque) construction. Items (3) and (4) apply only to buses having a body-on-chassis design, such as most school buses.
FMCSR 393.201, Frames.

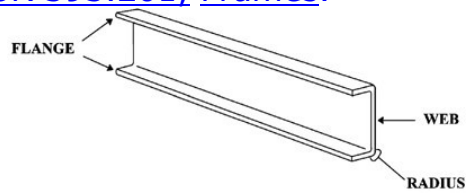

2) Tire and Wheel Clearance

Any condition, including loading, that causes the body or frame to contact with a tire or any part of the wheel assemblies, at the time of inspection. FMCSR 393.75, .

3) Roof/Body Structure
(Applicable only to Carpenter School Buses)

a) Any body structure area (roof bow/Carlin rail/window post) that is cracked.

b) Any body structure area (roof bow/Carlin rail/window post) that has been welded and has cracked again, or additional cracks appear in the structural area after initial welding has occurred, is permanently scrapped.

c) Any body structure area (roof bow/Carlin rail/window post) where 20% or more of the structural area is cracked, will be scrapped.

d) Any lower Carlin rail that is cracked all the way through will be scrapped.

Note: Carpenter buses roof/body structure will be required to be inspected yearly. FMCSR 393.201(a)

18. Fuel System

1) Liquid Fuels

a) A fuel system with a dripping leak while performing inspection at any point (including refrigerator or heater fuel systems FMCSR 396.3, Inspection, Repair, and Maintenance.

Note: Diesel fluid residue from previous repair and service to the system is not an OOS condition. Must be actively leaking at time of inspection

b) A fuel tank not securely attached to the vehicle. FMCSR 396.65, All Fuel Systems

Note: Some fuel tanks use spring or rubber bushings to permit movement.

c) Vehicle missing fuel cap. FMCSR 393.67, Liquid Fuel Tanks.

2) Gaseous Fuels

Compressed Natural Gas (CNG), liquefied Petroleum Gas (LPG) and Liquefied Natural Gas (LNG)

Occupational Safety Note: Personnel must exercise extreme caution whenever checking a gaseous fuel system for leaks. Any possibility of creating sparks, static electricity, friction, etc., must be avoided as they could cause a fire or explosion.

Occupational Safety Note: Vehicles with leaking gaseous fuel systems must be parked carefully. Gases escaping from CNG and LNG systems will rise. If the vehicle is parked inside a building or under a canopy, roof or similar cover, combustible gasses can collect beneath the ceiling. Escaping LPG falls and can form a "pool" of combustible gas near the ground and displaces air including oxygen. LPG and liquid LNG will flow into open drains. Combustible gases can explode when ignited by an open flame or spark.

a) CNG or LPG

Any fuel leakage from the CNG or LPG system detected visibly, audibly, or by smell and verified by either a bubble test using non ammonia, non-corrosive soap solution, or a flammable gas detection meter. FMCSR 396.3, Inspection, Repair, and Maintenance.

b) LNG

Occupational Safety Note: LNG is a cryogenic material and presents a potential safety hazard due both to the extremely cold temperature of its liquid and the flammability of its vapor. Personnel inspecting such systems should exercise upmost caution including the wearing of proper eye protection, gloves and clothing.

Note: LNG liquid and vaporized gas is odorless and undetectable by the human sense of smell. Frost buildup is not necessarily evidence of leakage. Many components of LNG fuel systems are extremely cold and will exhibit an even coat of frost produced by moisture in the surrounding air condensing and freezing on them.

a) A cloud of water vapor coming from any

component of the fuel system.

Note: It is normal, particularly in humid conditions, for water vapor to collect around many portions of a LNG fuel system.

b) Any fuel leakage from the LNG system detected visibly or audibly and verified by either a bubble test using non-ammonia, non-corrosive soap solution or a reading of more than 5000 PPM on flammable gas detection meter.

c) Dripping liquid that boils or vaporizes in the air. FMCSR 396.3, Inspection, Repair, and Maintenance.

19. Handrail

a) Any vehicle whose handrails have not been modified to ensure that hood cords, back pack straps or belts will not become entangled. National School Transportation Specifications and Procedures, 2015, (pg. 82) FMCSR 393.203(a) Cab and body components

20. Horn

Any vehicle whose horn does not work. FMCSR 393.81, Horn.

21. Lighting Devices

(Headlamps, Tail Lamps, Stop Lamps, Turn Signals, Warning Lights and Alarms)

1) Headlamps

The bus does not have at least one head lamp operating on low beam. FMCSR 393.24 (a)

2) Tail Lamps

The bus does not have at least one steady burning tail lamp on the rear of the vehicle, visible from 500 feet (152.4m).FMCSR 393.9

3) Stop Lamps

Does not have at least one operative stop lamp on the rear of a vehicle, visible from 500 feet (152.4m).
FMCSR 393.9, FMCSR 393.9, Lamps Operable, Prohibition of Obstructions of Lamps and Reflectors; FMCSR 393.11, Lamps and Reflective Devices; and FMCSR 393.17, Lamps and Reflectors.

4) Turn Signals

Does not have operative turn signals visible on each side of the rear of the vehicle.
FMCSR 393.9, Lamps Operable, Prohibition of Obstructions of Lamps and Reflectors;
FMCSR 393.11, Lamps and Reflective Devices; and FMCSR393.17 Lamps and Reflectors.

5) Warning Lights

a) Four-Way Hazard Lights

Four-way hazard lights do not fully operate in the front and rear of the vehicle.

b) Overhead Amber Flashing Lights

Overhead amber flashing lights do not fully operate when door is closed.

c) Overhead Red Flashing Lights

Overhead red flashing lights do not fully operate when vehicle is stopped and the loading/unloading door is open.
FMCSR 393.19 Hazard Warning Signal.

6) Back-up Warning Alarm

The back-up warning alarm is not operating at a minimum of 87 dba. Violation code392.2SBR.BWA

22. Mirrors

1) Any required mirror that is missing, damaged, clouded, or obscured.

2) Any mirror system that fails to hold a set adjustment FMCSR 393.80

23. Restraint Systems

(3-point Lap/Shoulder Seat Belts)

1) Driver Restraint System

Any part of the driver's safety restraint assembly that is missing, frayed, not properly installed or defective as to prevent proper securement of driver.

2) Student Restraint Systems

Any part of a student restraint system that is missing, frayed, not properly installed or defective as to prevent proper securement of student.

Note: If a student restraint system is defective, the seat shall be placed out of service, not the bus. The seat must be clearly marked that it is out of service.

Note: Seat must be clearly identified/marked as out of service. FMCSR 393.93, Seats, Seat Belt Assemblies, and Seat Belt Assembly Anchorages.

24. Steering Mechanism

1) Steering Wheel Lash
(Free Play)

See the chart below. When any of these values - inch movement or degrees are met or exceeded, vehicle shall be placed out-of-service. FMCSR 393.209, Steering Wheel Systems

Note: For power steering, the engine must be running.

Steering Wheel Diameter	Manual System Movement 30º	Power System Movement 45º
16" (40.6 cm)	4 ½ (11.4 cm or more)	6 3/4" (17.1 cm or more)
18" (45.7 cm)	4 3/4" (12 cm or more)	7 1/8" (18.1 cm or more)
19" (48.2 cm)	5 ¼" (13.3 cm or more)	7 1/2" (19 cm or more)
20" (50.8 cm)	5 1/2" (13.9 cm or more)	7 7/8" (20 cm or more)
21" (53.3 cm)	5 1/2" (13.9 cm or more)	8 1/4" (20.9 cm or more)
22" (55.8 cm)	5 3/4" (14.6 cm or more)	8 5/8" (21.9 cm or more)

Note: For power systems, if steering wheel movement exceeds 45 degrees before steering axle tires move, proceed as follows: Rock steering wheel left to right between points of power steering valve resistance. If that motion exceeds 30 degrees (or the inch movement values shown for manual steering) vehicle shall be placed out-of-service. This test is to differentiate between excessive lash and power systems designed to avoid providing steering assistance when the steering wheel is turned while the vehicle is motionless (not moving forward or backward).

2) Steering Column

a) Any absence or looseness of U-bolt(s) or positioning part(s).

b) Obviously repair-welded universal joint(s).

c) Steering wheel not properly secured.

d) Telescopic steering column does not lock into position. Tilt steering column does not lock in at least one position. FMCSR393.209, Steering Wheel Systems

3) Front Axle Beam and All Steering Components
(Other Than the Steering Column including hub

a) Any crack(s).

b) Any obvious welded repair(s).
FMCSR 396.3, Inspection, Repair, and Maintenance

4) Steering Gear Box
(Including Rack and Pinion)

a) Any mounting bolt(s) loose or missing.

b) Any crack(s) in gear box or mounting brackets. FMCSR 393.209, Steering Wheel Systems

c) Any obvious welded repairs.

d) Any looseness of the yoke-coupling to the steering gear input shaft.
FMCSR 396.3, Inspection, Repair, and Maintenance

5) Pitman Arm

a) Any looseness of the pitman arm on the steering gear output shaft. FMCSR 393.209, Steering Wheel Systems

b) Any obvious welded repairs(s). FMCSR 396.3, Inspection, Repair, and Maintenance

6) Power Steering

a) Auxiliary power assist cylinder loose or separated at either end from the attachment point(s) allowing movement of more than one inch (25.4 mm) in any direction. FMCSR 393.209 Steering Wheel Systems

b) Power steering fluid leaking steadily (showing little

variation, fluctuation or a visible puddle on the floor) from any component in the system while doing the inspection. This includes any component that shares the reservoir to the power steering system.

Note: Fluid residue from previous repair and service to the system is not an Out of Service condition.

7) Ball and Socket Joints

a) Any movement under steering load of a stud nut.

b) Any motion, other than rotational, between any linkage member and its attachment point of more than 1/8 inch (3.2 mm) measured with hand pressure only.

c) Any obvious welded repair(s).
FMCSR 393.209, Steering Wheel Systems

8) Tie Rods and Drag Links

a) Loose clamp(s) or clamp bolt(s) on tie rods or drag links.

b) Any looseness in any threaded joint.
FMCSR 396.3, Inspection, Repair, and Maintenance

9) Nuts

Loose or missing on tie rods, pitman arm, drag link, steering arm, tie rod arm or cotter pin. FMCSR 396.3, Inspection, Repair, and Maintenance

10) Steering System

Any modification or other condition that interferes with the free movement of any steering component. FMCSR 393.209, Steering Wheel Systems

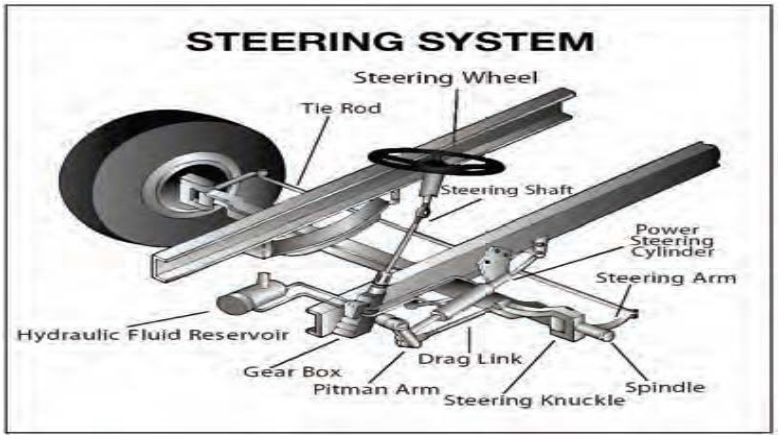

25. Seats and Barriers

1) Any seat or barrier that is not securely mounted and is not lose or broken.

2) Any seat cushion bottom not securely fastened to the seat frame or can be removed from the seat frame.

3) Any seat or barrier material so defective that it compromises the integrity of occupant protection and compartmentalization.
National School Transportation Specifications and Procedures, 2015 (pg. 97); and
FMCSR 393.93

26. Seat-Driver

Driver seat is not securely fastened to vehicle and/or fails to maintain adjusted position. Federal Motor Vehicle Safety Standards 393.93, Seats Seat Belt Assemblies, and Seat Belt Assembly Anchorages

27. Stepwell

Any part of the stepwell that is not secured, is loose, torn or damaged or that would present a tripping hazard due to excessive wear. National School Transportation Specifications and Procedures, 2015, (pg. 98) FMCSR 393.203

28. Stop Signal Arm(s)

1) Any vehicle whose stop signal arm(s) does not fully extend either automatically or manually when activated, or does not have at least one operable warning lamp.

2) Any vehicle equipped with a LED light system, where at least 50% of the LED lights are inoperable. Violation 392.2SBR.SSA

29. Suspension

1) Axle Parts/Members

a) Any U-bolt(s) or other spring to axel clamp bolt(s) cracked, broken, lose or missing.

b) Any axle, axle housing, spring hanger(s), or other axle positioning part(s) cracked, broken, loose, or missing resulting in shifting of an axel from its normal position.

Note: After a turn, lateral axle displacement is normal with some suspensions including composite springs mounted on steering axles.
FMCSR 393.207, Suspension Systems

2) Spring Assembly

a) One-fourth or more of the leaves in any spring assembly broken.

b) The suspension connecting leaf, in springs having such a leaf, has the same function as the suspension connecting rod components referenced in *Suspension Connecting Rod*, *Tracking Component Assembly or Sway Bar Components* and should be treated as such a component for purposes of out-of-service.

c) Any broken main leaf in a leaf spring.

Notes: Any leaf of leaf spring assembly is a main

leaf if it extends, at both ends, to or beyond:

a) The load bearing surface of a spring hanger or equalizer.

b) The spring end cap or insulator box mounted on the axle.

c) A spring eye, further: Any leaf or a helper spring assembly is a helper main leaf if it extends, at both ends, to or beyond the load bearing surface of its contact pad, hanger, or equalizer.

d) The suspension connecting leaf, in springs having such a leaf, has the same function as the torque or radius components referenced in *Suspension Connecting Rod*, *Tracking Component Assembly or sway Bar Components* and should be treated as such a component for purposes of out-of-service.

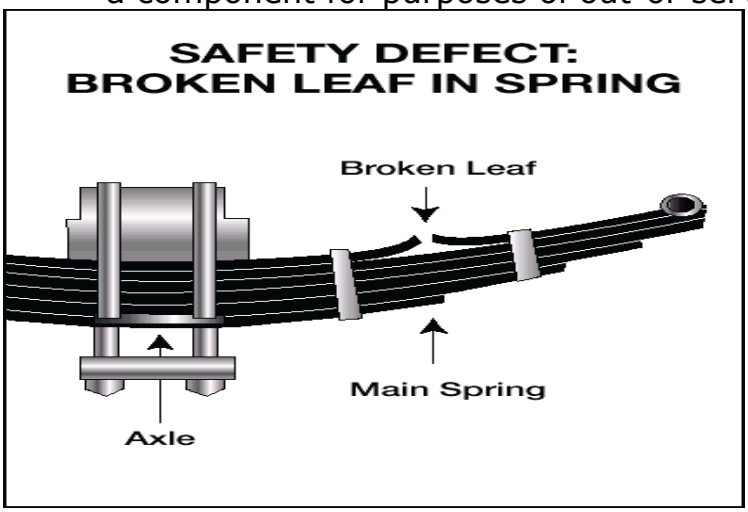

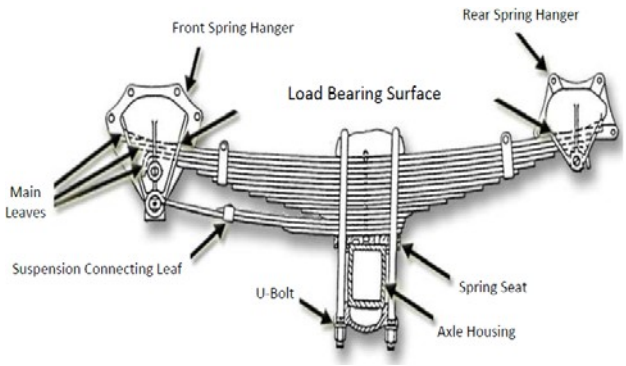

e) Coil spring broken.

f) Rubber spring missing.

g) One or more leaves displaced in a manner that could result in contact with a tire, rim, brake, drum, or frame.

h) Broken torsion bar spring in torsion bar suspension.

i) Air Suspension.

j) Deflated air suspension (one or more deflated air spring/bag).

Note: Deflated aftermarket/secondary air bag suspension in addition to a primary leaf/coil spring suspension does not result in an out-of-service condition.

3) Composite Springs

a) Intersecting cracks of any length.

b) A crack that extends beyond 3/4 the length of the spring.

Note: A crack is a separation in any axis which passes completely through the spring.

Intersecting cracks of any length.

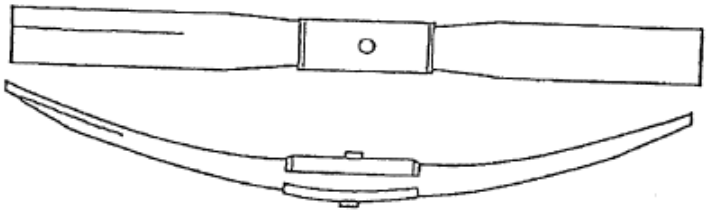

Side to side crack extending beyond 3/4 of the length of the spring. (A crack that extends beyond 3/4 the length of the spring.)

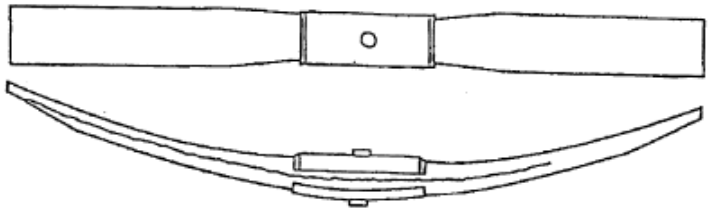

Top to bottom crack extending beyond 3/4 of the length of the spring. (A crack that extends beyond 3/4 the length of the spring.)

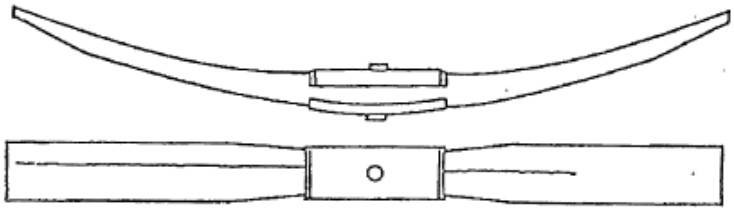

4) Suspension Connecting Rod, Tracking Component Assembly
(Or Sway Bar Components)

a) Any part of a suspension connecting rod or tracking component assembly (including spring leaves used as a suspension connecting rod) or any part used for attaching same to the vehicle frame or axle that is cracked, loose, broken or missing.

b) Any part of a suspension connecting rod or tracking component assembly (including spring leaves used as a suspension connecting rod) equipped with rubber bushings is missing the bushing or the bushing is worn to the extent that the component can be moved by hand along the axis of the component.

Note: A shock absorber is not a suspension connecting rod. A defective shock absorber will not result in an OOS condition.

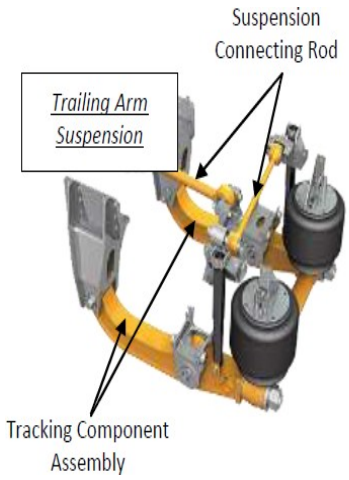

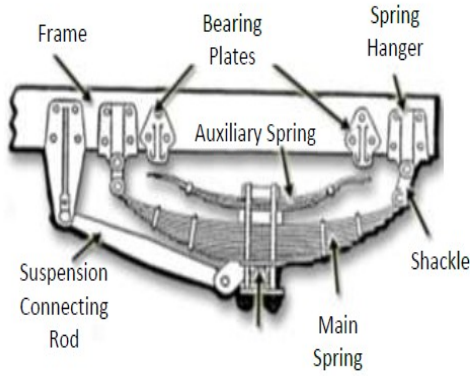

5) Torque, Radius or Tracking Components

Any part of a torque, radius, or tracking component assembly or any part used for attaching same to the vehicle frame or axle that is cracked, loose, broken, or missing (including spring leaves used as a radius or torque rod, missing bushings but not loose bushings in torque or track rods). FMCSR 393.207, Suspension Systems

30. Tires

A. **Any Tires on any Front Steering Axle**

1) With less than 4/32 inch tread when measured in any two adjacent major tread grooves (typically any groove containing a tread wear indicator) at any location on the tire.

   Note: Measurements should not be made on stone ejectors or tread wear indicators.

2) When any part of the belt material, breaker strip or casing ply is showing in the tread.

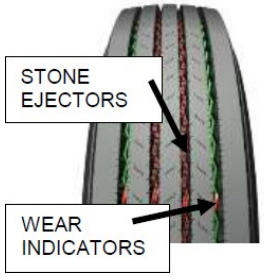

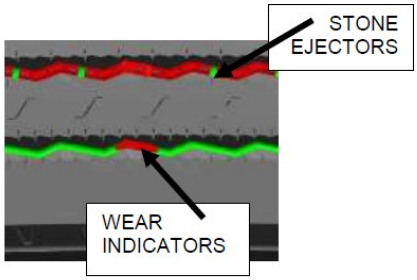

3) When sidewall is cut, worn, or damaged to the extent that the steel or fabric ply cord is exposed. FMCSR 393.75, Tires

4) Labeled "Not for Highway Use" or carrying other markings that indicate excluded use on steering axles. FMCSR 393.75

5) Visually observable bump, bulge, or knot apparently related to tread or sidewall separation. FMCSR393.75, Tires

   Exception: A bulge (due to a repair) of up to 3/8 inch (9.5 mm) in height is allowed. This bulge may sometimes be identified by a blue triangular label in the immediate vicinity.

6) Presence of rubber coated cord or cured rubber plug in the sidewall. FMCSR 393.75

7) Tire has noticeable (e.g., can be heard or felt) leak, or has 50 percent or less of the maximum inflation marked on the tire sidewall. FMCSR 393.75, Tires

   Note: Measure tire air pressure only if there is evidence the tire is under-inflated.

8) So mounted or inflated that it comes in contact with any part of the vehicle.FMCSR 393.75 __

Note: An out-of-service condition exists only if the tire can be made to contact another component at the time of inspection.

9) Weight carried exceeds tire load limit. This includes overloaded tire resulting from low air pressure. FMCSR 393.75, Tires

10) Any vehicle that bias and radial tires have been combined.

11) Any vehicle with re-grooved, recapped, or retread tires. 393.75, Tires

F. All Tires Other Than Those Found on the Front Steering Axle

1) Tire has noticeable (e.g., can be heard or felt) leak, or has fifty (50) percent or less of the maximum inflation pressure marked on the tire sidewall.

Note: Measure tire air pressure only if there is evidence the tire is under-inflated.

2) Any tire with visually observable bump or knot apparently related to tread or sidewall separation.

Exception: A bulge (due to a repair) of up to 3/8 inch (9.5 mm) in height is allowed. The bulge may sometimes be identified by a blue triangular label in the immediate vicinity. Any vehicle with re-grooved, recapped, or retread tires. FMCSR 393.75, Tires

3) So mounted or inflated that it comes in contact with any part of the vehicle.

Note: This includes any tire contacting its mate in a dual set. FMCSR 393.75

4) Weight carried exceeds tire load limit. This includes overloaded tire resulting from low air pressure.

5) Seventy-five (75) percent or more of the tread width loose or missing in excess of 12 inches (30.4 cm) in circumference.

6) **Bias Ply Tire.** When more than one ply is exposed in the sidewall and the area exceeds 2 square inches.

7) **Radial Ply Tire.** When more than one ply is exposed in the sidewall and the area exceeds 2 square inches (12.9 sq. cm.)

   Note: The following conditions apply to all tires; however, when these conditions are found on a dual tire set, both tires must meet one or more of the conditions listed in item 10.

8) **Bias Ply Tire.** When more than one ply is exposed in the tread area and the exposed area of the top ply exceeds 2 square inches (12.9 sq. cm or damaged plies are evident in the sidewall up to 2 square inches (12.9 sq. cm).

9) **Radial Ply Tire.** When two or more plies are exposed in the tread area and the exposed area of the top ply exceeds 2 square inches (12.9 sq. cm) or damaged cords are evident in the sidewall up to 2 square inches (12.9sq cm).
   Federal Motor Vehicle Safety Standards 393.75 Tires

10) Presence of rubber coated cord or cured rubber plug in the sidewall. FMCSR 393.75_

11) So worn that less than 2/32 inch (.8 mm) tread remains when measured in any two adjacent major tread grooves (typically any groove containing a tread wear indicator) at 3 separate locations around the circumference of the tire at least 8 inches apart.

Note: Measurements should not be made on stone ejectors or tread wear indicators.
FMCSR393.75, Tires

G. Lodged Items Between Tires of a Dual Tire Set

Any solid item lodged between a set of dual tires that is in direct contact with the sidewalls of the tires (excluding mud and snow). FMCSR 396.7(a)

31. Wheelchair-Lift Equipped Buses

1) Wheelchair lift does not function as designed or is inoperable.

2) Any hydraulic line leaking during operation.

3) Any wheelchair lift whose brake interlock system, if equipped, is non-operational.

4) Any wheelchair lift with a platform barrier/roll stop that is non-operational.

5) Any wheelchair restraint system that is missing, incomplete, improperly installed or damaged.

6) Any wheelchair occupant restraint system that is not secured to the floor track of the bus or securely contained within the passenger compartment.

32. Wheels, Rims and Hubs

1) Lock or Side Ring

Bent, broken, cracked, improperly seated, sprung, or mismatched ring(s).

2) **Rim Crac**ks

Any circumferential crack.

3) Disc Wheel Cracks

a) Any crack exceeding 3 inches (76.2 mm) in length.

b) A crack extending between any two holes (hand holes, stud holes and center holes).

c) Two or more cracks anyplace on the wheel.

4) Bolt/Stud Holes (Disc Wheels)

Any visible elongated bolt/stud hole.

5) Spoke Wheel Cracks

a) Two or more cracks more than 1 inch (25.4 mm) long across spoke or hub section.

b) Two or more web areas with cracks.

6) Tubeless Demountable Adapter Cracks

a) A crack exceeding 3 inches (76.2 mm).

b) Cracks at three or more spokes.

7) Wheel Fasteners

Loose, missing, broken, cracked, or stripped wheel fasteners that are ineffective as follows: for 10 fastener positions - 3

anywhere or 2 adjacent; for 8 fastener positions or less - 2 anywhere (this applies to both spoke and disc wheels).

8) Welds

a) Any cracks in welds attaching disc wheel disc to rim.

b) Any crack in welds attaching tubeless demountable rim to adapter.

c) Any welded repair on any aluminum wheel(s).

d) Any welded repair other than disc to rim attachment on steel disc wheel(s).
FMCSR 393.205, Wheels

9) Hubs

a) When any axle bearing (hub) cap, plug or filler plug is missing or broken allowing an open view into hub assembly. Normal venting of the fill/vent plug is not out of service.

b) Smoking from wheel hub assembly due to bearing failure.

Note: Also refer to "Brake Systems – Brake Smoke/Fire"; as the cause may either be the brakes or a problem in the hub and bearing area.
FMCSR 396.3, Inspection, Repair, and Maintenance

c) When any wheel seal is leaking. This must include evidence of wet contamination of the brake friction material and accompanied by evidence that further leaking will occur.

Note: Refer to the applicable contaminated friction material criterion in "Brake Systems," when condition is present.

Note: Grease/oil on the brake lining edge, back of shoe, or drum edge and oil stain with no evidence of fresh oil leakage are not conditions for out-of-service.

d) Lubricant is leaking from the hub and is present on the wheel surface (caused by a loose hub cap or hub cap bolts, or hub cap damage) accompanied by evidence that further leakage will occur.

e) No visible or measurable amount of lubricant showing in hub.
FMCSR 396.5, Lubrication

NOTE: The picture below is of a normal hub fill/vent plug.

NOTE: The picture below is of a missing normal hub fill/vent plug that would place the bus out of service.

33. Windows

1) Any glass or glazing that is broken through or missing.

2) Any glass not of approved type under e FMCSR393.60, Glazing in Specific Openings.

3) Windshield has discoloration or other damage in that portion extending upward from the height of the topmost portion of the steering wheel, but not including a two-inch border at the top and a one-inch border at each side of the windshield or each panel thereof, except as follows:

   a) Color or tint applied by the manufacturer for the reduction of glare;

   b) Any crack not over ¼ inch long, if not intersected by any other crack;

   c) Any damaged area, that can be covered by a disc ¾ inch in diameter, if not closer than three inches to any other such damaged area; or

   d) Driver's side area window(s) have chips, clouding, or cracks that obscure the driver's vision under l FMCSR 393.60, Glazing in Specified Openings

34. Windshield Wipers

Any school bus that has an inoperable wiper or missing, or damaged parts that renders it ineffective.
FMCSR 393.78, Windshield Wiping and Washing Systems